SUPERVIZOR
D.R.D.P. TIMIŞOARA
BUN DE EXECUȚIE
DATA: 01.04.2022

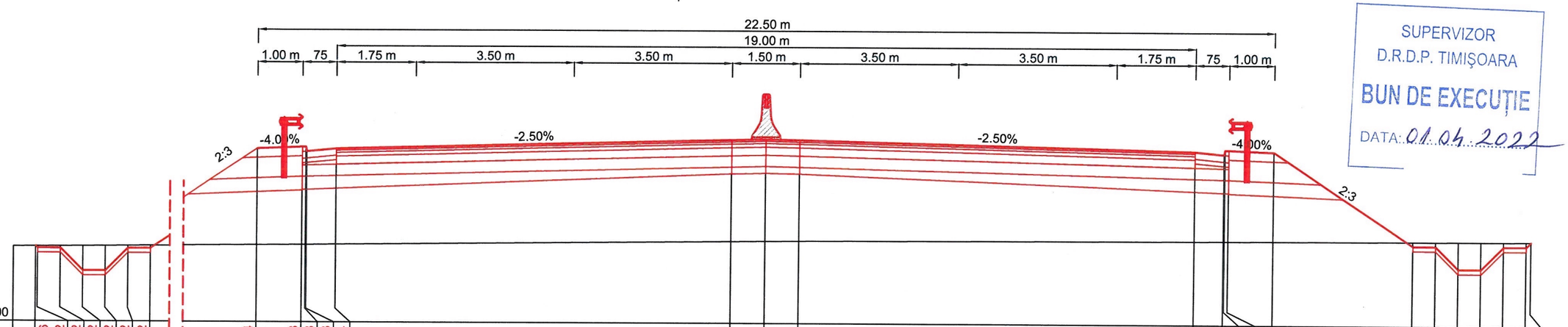

COTE PROIECT	93.66	93.62	93.62	93.12	93.12	93.62	93.62	95.84	95.88	95.88	95.78	95.84	96.06	96.08	96.06	95.84	95.78	95.88	95.88	95.84	93.77	93.77	93.27	93.27	93.77	93.77	93.88
COTE TEREN	93.66	93.66	93.66	93.67	93.67	93.67	93.68	93.71	93.71	93.71	93.71	93.72	93.81	93.82	93.83	93.86	93.86	93.86	93.86	93.86	93.87	93.87	93.87	93.88	93.88	93.88	93.88
DISTANTE	-17.12	-17.08	-16.58	-16.08	-15.58	-15.08	-14.58	-11.25	-10.25	-10.17	-10.15	-9.50	-0.75	0.00	0.75	9.50	10.15	10.17	10.25	11.25	14.34	14.84	15.34	15.84	16.34	16.84	16.95

KM = 4075.00

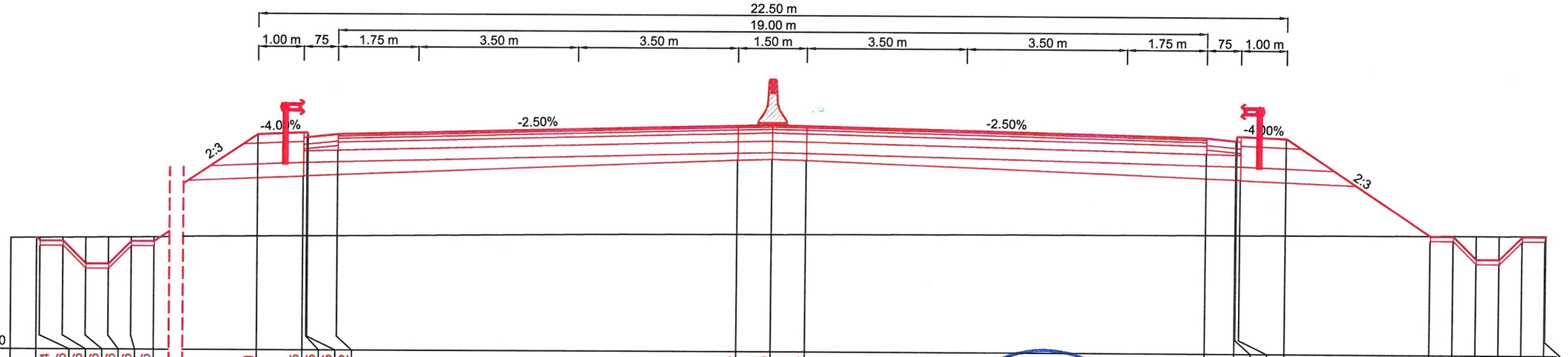

COTE PROIECT	93.44	93.36	93.36	92.86	92.86	93.36	93.36	95.71	95.75	95.75	95.65	95.72	95.94	95.95	95.94	95.72	95.65	95.75	95.75	95.71	93.60	93.60	93.10	93.10	93.60	93.60	93.62
COTE TEREN	93.44	93.44	93.44	93.45	93.45	93.45	93.46	93.49	93.49	93.50	93.50	93.50	93.56	93.56	93.57	93.59	93.60	93.60	93.60	93.60	93.61	93.61	93.61	93.61	93.62	93.62	93.62
DISTANTE	-17.35	-17.27	-16.77	-16.27	-15.77	-15.27	-14.77	-11.25	-10.25	-10.17	-10.15	-9.50	-0.75	0.00	0.75	9.50	10.15	10.17	10.25	11.25	14.42	14.92	15.42	15.92	16.42	16.92	16.94

KM = 4050.00

POPESCU A. CĂ... VERIFICATOR P...

SOCIETATEA COMERCIALA TOTAL ROAD S.R.L. BUCUREȘTI - ROMÂNIA

BENEFICIAR: COMPANIA NATIONALA DE ADMINISTRAREA INFRASTRUCTURII RUTIERE S.A. (C.N.A.I.R. S.A.)	**ANTREPRENOR:** TODINI CONSTRUZIONI GENERALI S.p.A.	**TITLU PROIECT** PROIECTARE SI EXECUȚIE „DRUM DE LEGĂTURĂ AUTOSTRADA A1 ARAD - TIMIȘOARA - DN 69"	**SPECIFICATIE**	**NUME**	**SEMNATURA**	**DATA** Martie 2022	**TITLU PLANSA:** LUCRARI DE INFRASTRUCTURA RUTIERA PROFILURI TRANSVERSALE CURENTE DRUM DE LEGATURA DN 69 - A1
		FAZA PROIECT PROIECT TEHNIC DE EXECUTIE (P.T.E.)	DESENAT	Teh. Sorin VASILACHE		**MĂRIMEA** A3	
		CONTRACT NR. 92/7703/01.02.2021	PROIECTAT	Ing. Mihai COROIAN			
		PROIECT NR. 08/2021	SEF PROIECT	Ing. Catalin GRUIANU		**SCARĂ** 1:100	**NUMAR PLANSA:** PTC - 086
			VERIFICAT	Ing. Adrian NISTOR			**PICHET** -

Revizie		
NR.	DATA	DESCRIERE
0	08.2021	Emitere P.T.E.
1	09.2021	Conf. nr.290/DLA1-224
2	02.2022	Conf. ASR 92/93833

PAGE 1 / 1